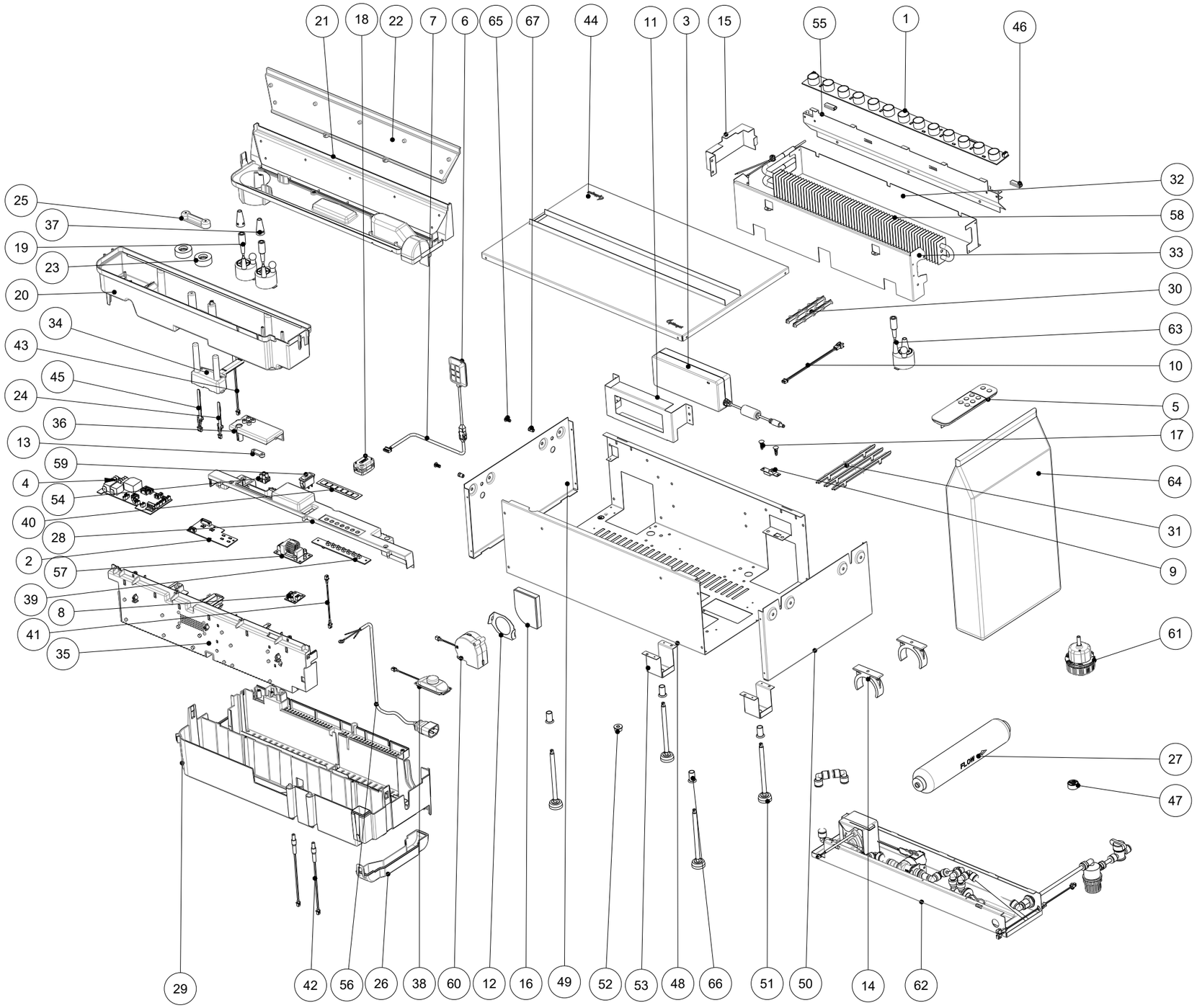

NO.	PART NO.	DESCRIPTION	QTY
1	100000294	RGB+YELLOW LD BOARD	1
2	100000295	RGB+Y LED DRIVER	1
3	100000310	5A PSU	1
4	100000976	MAIN PCB LIN	1
5	100000995	LINEAR REMOTE 8 BTN NO HEAT RGB	1
6	100000997	BLE RECEIVER RGB (NO HEAT) LIN	1
7	100000999	BT RECEIVER SOCKET	1
8	100001193	SOUND PCB BOARD	1
9	100001194	BINARY BOARD	1
10	100001371	LINK WIRE MOLEX	1
11	100002203	SOY PSU BRACKET	1
12	300001847	Fan Plate	1
13	01/20928/0	CABLE CLAMP MOULDING	1
14	01/71533/0	Water filter clip 50mm	2
15	1/110132/0	ELEMENT COVER	1
16	1/67007/0	FILTER	1
17	1/69830/0	PCB SUPPORT PILLAR	2
18	1/70503/0	SNAP FIT FERRITE CORE	1
19	1/70852/0	GLASS DISC TRANSDUCER	2
20	1/71125/0	SUMP	1
21	1/71127/0	NOZZLE BASE	1
22	1/71138/0	NOZZLE	1
23	1/71140/0	FLOAT MAGNET	2
24	1/71141/0	MAX REED SWITCH	1
25	1/71143/0	FLOAT STOPPER	1
26	1/71164/0	FAN HOUSING	1
27	1/71469/0	Water in line filter	1
28	1/71490/0	ELECTRONICS COVER	1
29	1/71491/0	BASE HOUSING	1
30	1/71711/0	Mist Baffle Slider	2
31	1/71712/0	MIST BAFFLE HOLES	3
32	1/71750/0	REAR BAFFLE	1
33	1/71751/0	FRONT_BAFFLE	1
34	1/71757/0	REED SWITCH HOLDER	1
35	1/71779/0	ELECTRONICS MOULDING	1
36	1/71781/0	ACCESS COVER	1
37	1/71816/0	TRANSDUCER CONE	2
38	1/71819/0	SPEAKER	1
39	1/71849/0	7WAY SWITCHING BOARD	1
40	1/71850/0	7 WAY DECAL	1
41	1/71909/0	7way SWITCH CABLE	1
42	1/71931/0	TRANSDUCER EXT WIRE	2
43	1/71982/0	FUELBED CONNECTOR WIRE	1
44	1/72009/0	500 Metal Fuelbed	1
45	1/72451/0	MIN FLOW REED SWITCH	1
46	1/73078/2	LED BOARD INSULATOR	2
47	1/73684/0	ABSORBTION VALVE SPONGE	1
48	1/73700/0	BASE PANEL - COMMERCIAL	1
49	1/74039/0	SIDE PANEL LHS	1
50	1/74040/0	SIDE PANEL RHS	1
51	1/74091/0	ADJUSTABLE FOOT - 100mm	4
52	1/74291/0	SPIRIT LEVEL	1
53	1/74814/0	FOOT BRACKET	2
54	2/15368/0	TERMINAL BLOCK	1
55	2/62624/0	MK3 LED BAFFLE ASSEMBLY	1
56	3/16766/0	SHORT CORD	1
57	3/22867/0	10amp CHOKE	1
58	3/23159/0	200W ELEMENT	1
59	3/23224/0	ON OFF SWITCH	1
60	3/23837/0	3000RPM IP55 DC FAN	1
61	4/19193/0	FILL CAP ASSY	1
62	4/19223/2	SOLENOID BOX	1
63	4/19267/0	SPARE CONE TRANSDUCER	1
64	4/19493/0	Adapter Kit	1
65	5/12049/0	M4 x 10mm SCREW	2
66	5/29064/0	M8 Rivnut	4
67	X-100B559	M4 NUT INSERT	2

GLEN DIMPLEX
HEATING AND VENTILATION IRELAND
RESEARCH & DEVELOPMENT
Barn road, Dunleer, Co.Louth, Ireland. Tel: +353(0)41 6872000

THIS DRAWING IS SUPPLIED IN CONFIDENCE AND THE COPYRIGHT THEREOF IS THE PROPERTY OF GLEN DIMPLEX : IT MUST NOT BE USED BY A THIRD PARTY WITHOUT PRIOR PERMISSION. © 2023

DRAWN BY	D.Kiely	A3	TITLE EXPLODED VIEW
SERIES			
SERIES DATE	25/04/23		
ISSUE	1		DRG NO 400001274
PROJECT	CAS500P RGB		

THIS DRAWING IS NOT UNDER QC CONTROL

OCN	----
DATE	25/04/23